CENTRAL DOOR LOCKING DIAGRAM:
Requires (1) #778 and (1) #742 Door Lock Actuator

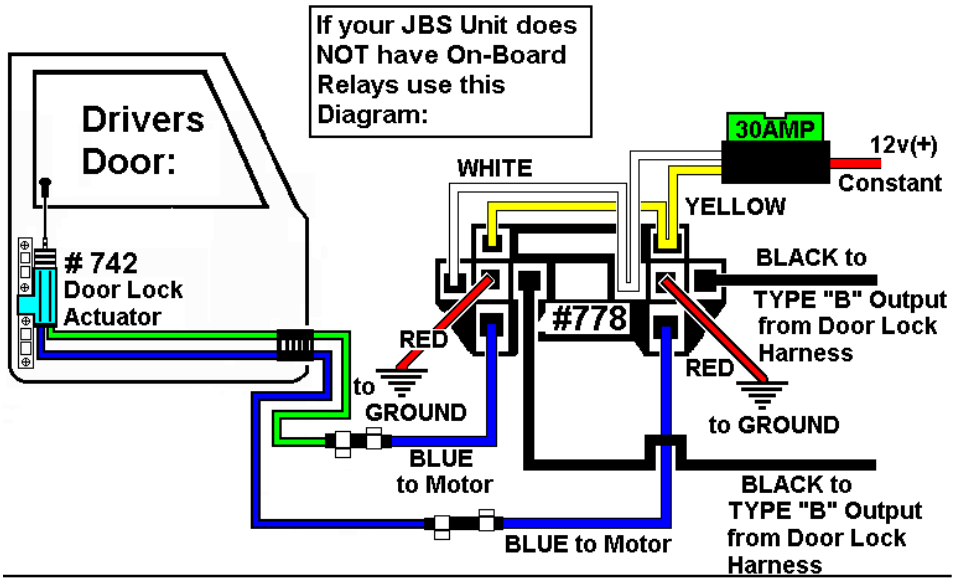

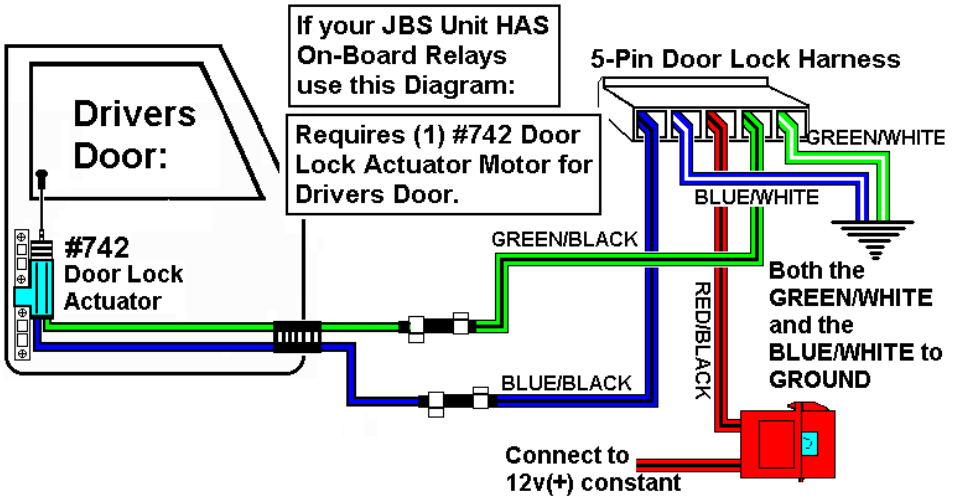

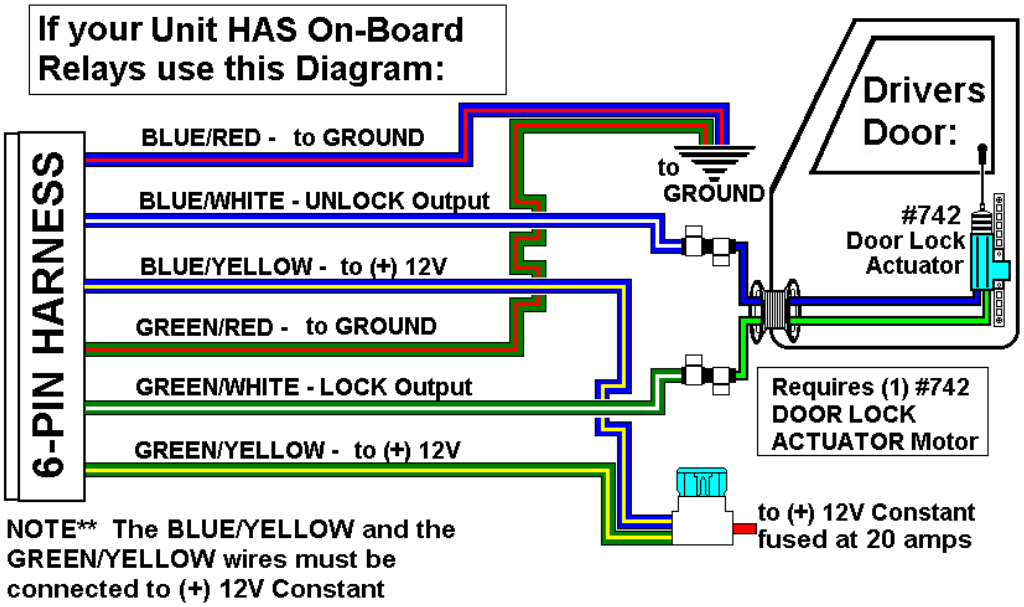

NOTE** The BLUE/YELLOW and the GREEN/YELLOW wires must be connected to (+) 12V Constant